GRIF*form* INNOVATIONS®

Lavatory Sink

Coved

O-Overmount

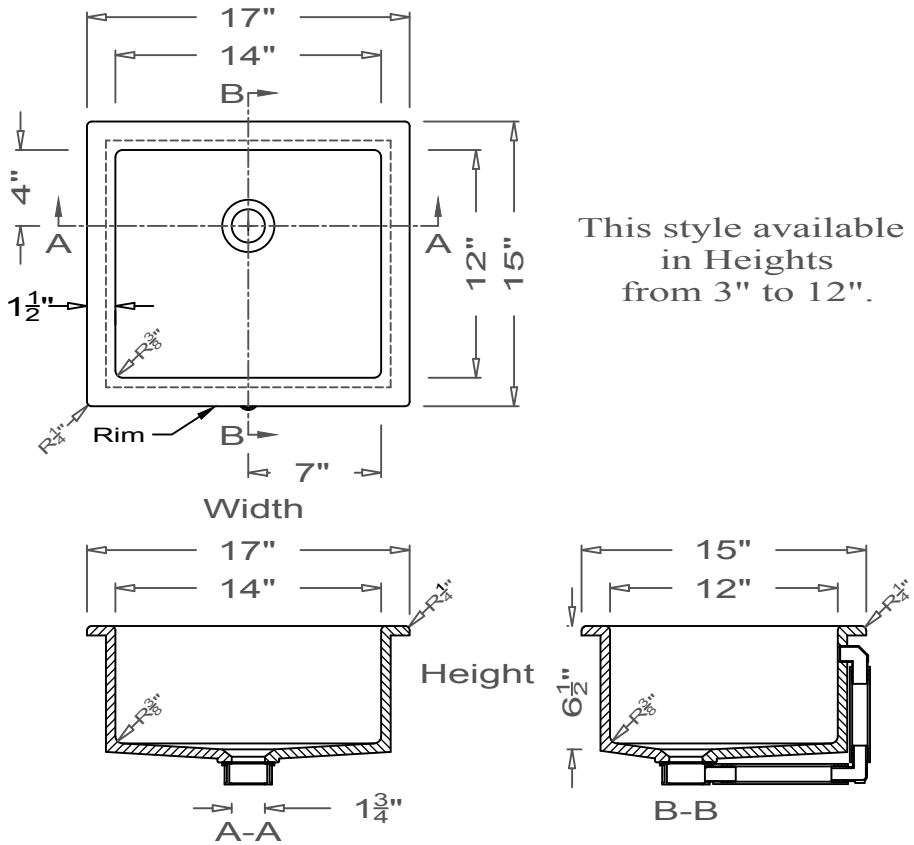

This style available in Heights from 3" to 12".

All drain holes are nominally 1 ¾" in diameter and accept all standard drain hardware.

All lavatory sinks come with an overflow drain assembly unless requested otherwise.

The information herein is the property of GRIF*form* INNOVATIONS® or its subsidiaries, without written permission, any copying, transmission to others, and any use except that which it is transferred for is prohibited.